In Dotazione
Included

Scrocco, una mandata e mezza.
Latch, one turn and half.

070.50.00.0

Finitura

00 = Acc. Zn Tropicale
Zinc Tropical Steel

50	1	30	0,606

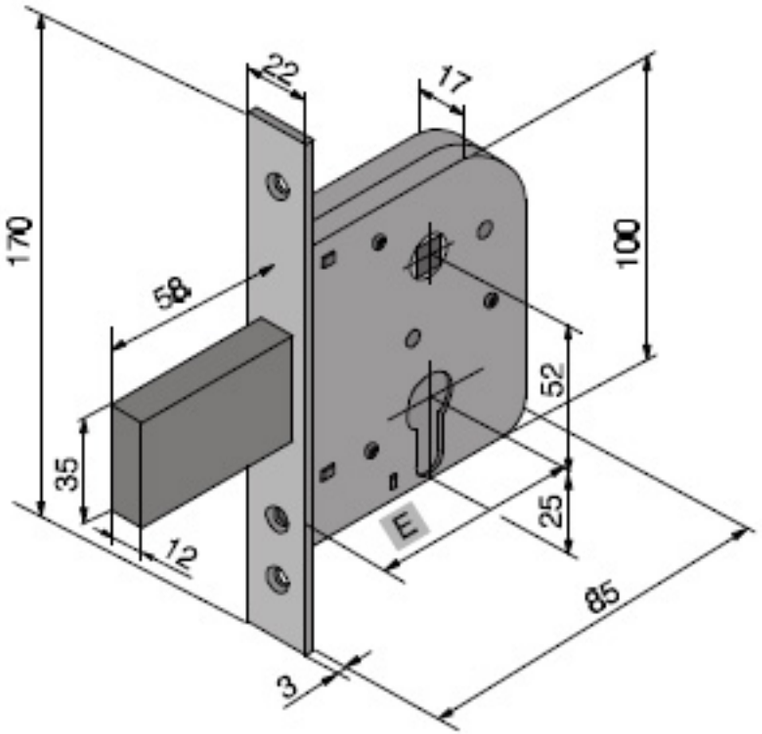

Accessori
Accessories

Cilindri
Art. 700-721-735-780
785-786-787
(leva DIN)

Pomoli
Art. 750-751-752 per
cilindri 721-735-787

Borchie
Art. 800.06.00.0
Art. 805.09.00.0